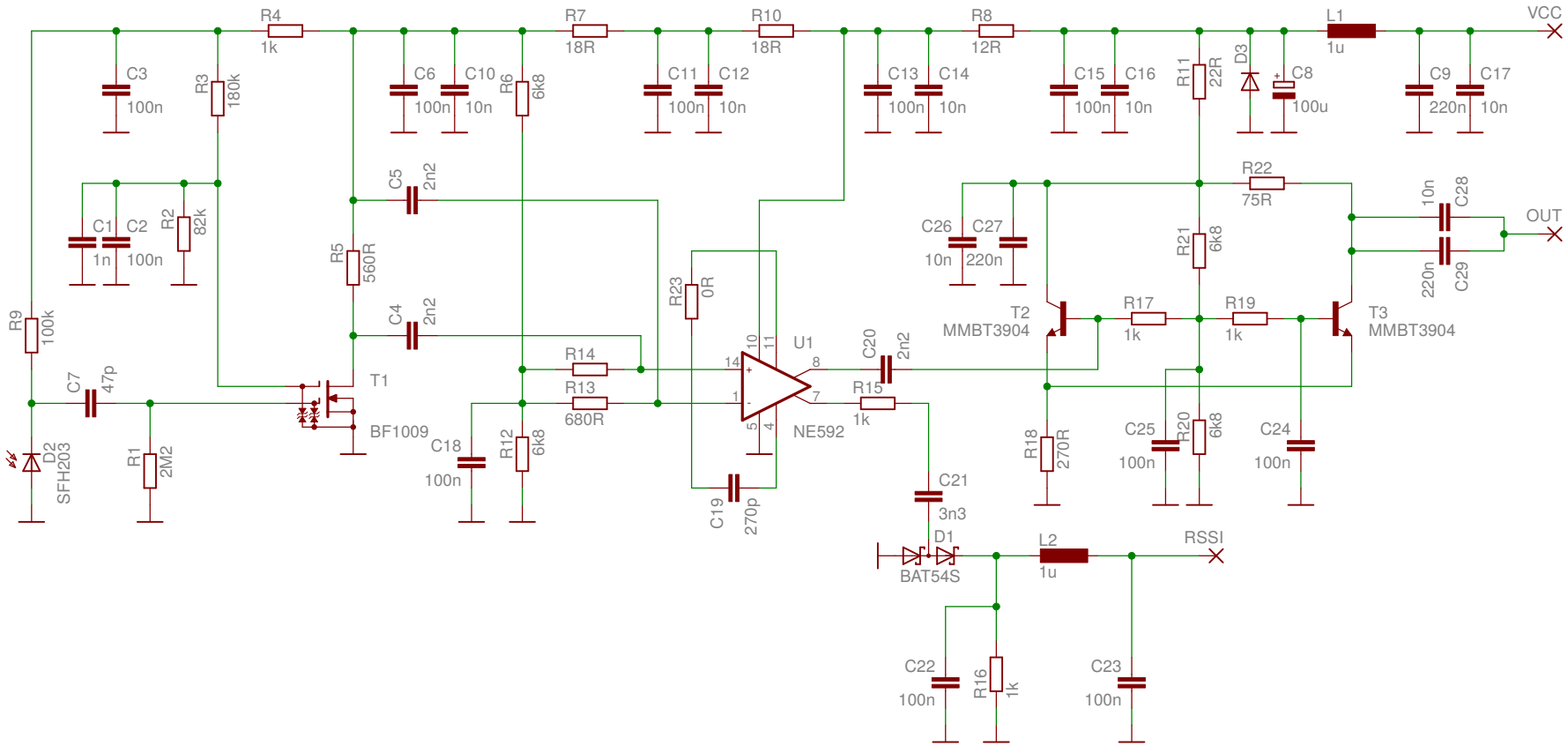

RONJA metroRX

TITLE: metroRX

Document Number:

REV:

Date: 20.04.16 14:09

Sheet: 1/1